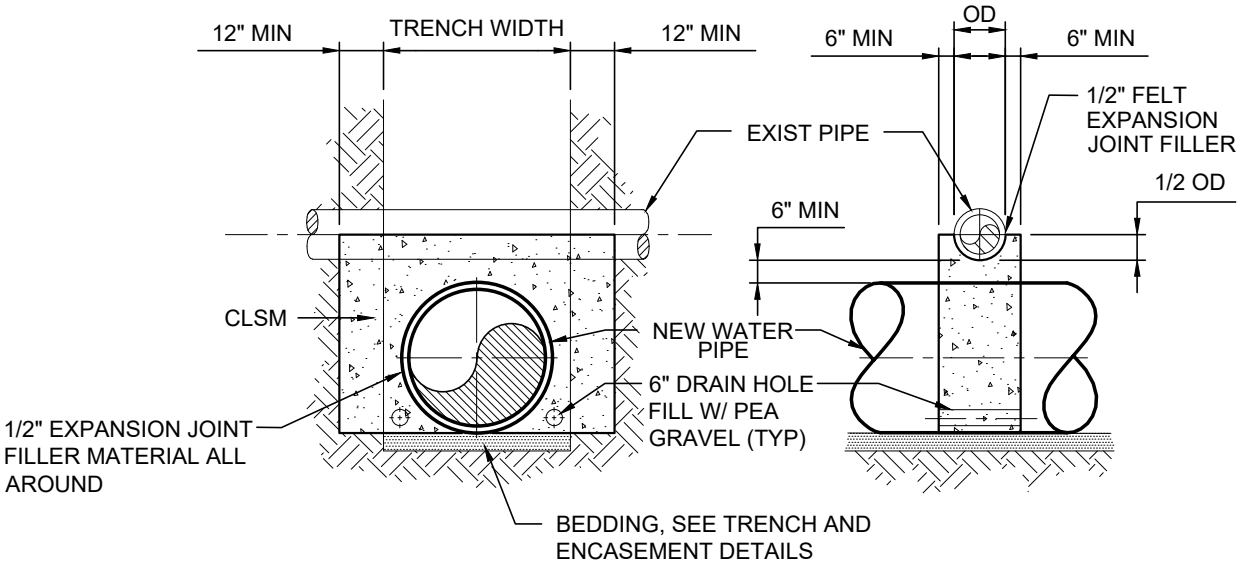

EXISTING PIPE OVER NEW WATER MAIN

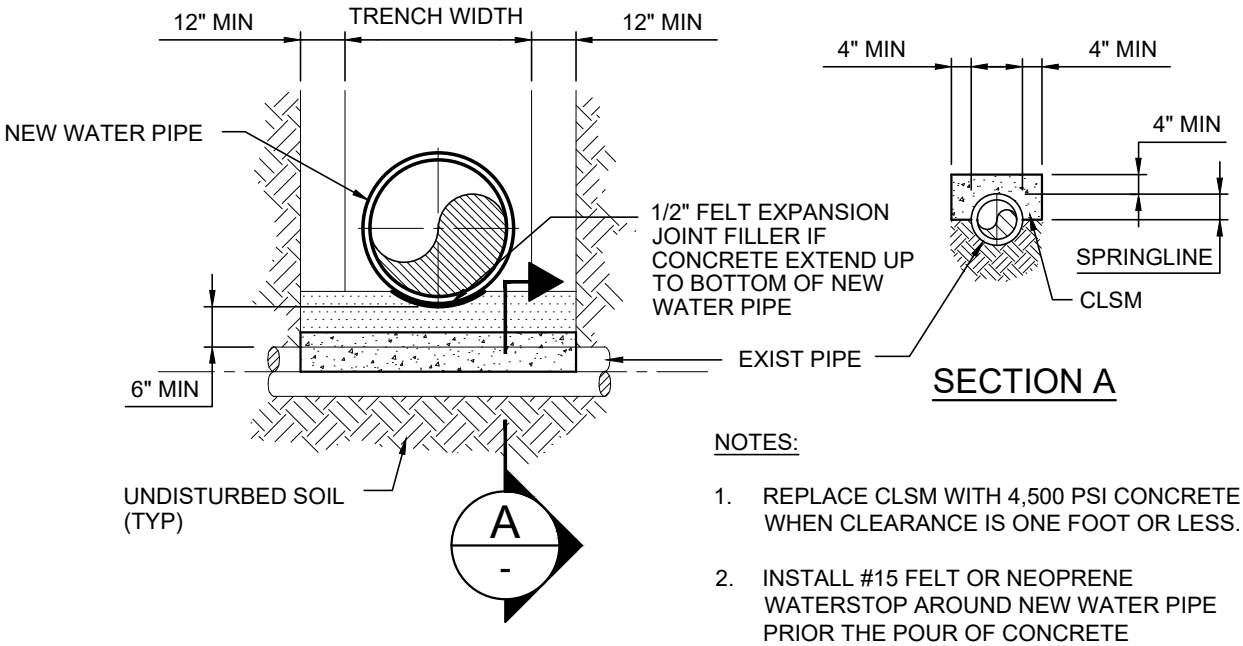

NOTES:

1. REPLACE CLSM WITH 4,500 PSI CONCRETE WHEN CLEARANCE IS ONE FOOT OR LESS.
2. INSTALL #15 FELT OR NEOPRENE WATERSTOP AROUND NEW WATER PIPE PRIOR THE POUR OF CONCRETE ENCASEMENT TO PREVENT BONDING.

EXISTING PIPE UNDER NEW WATER MAIN

STRUCTURAL SUPPORT AT WATER CROSSINGS

NOT TO SCALE

PL02-7 091724