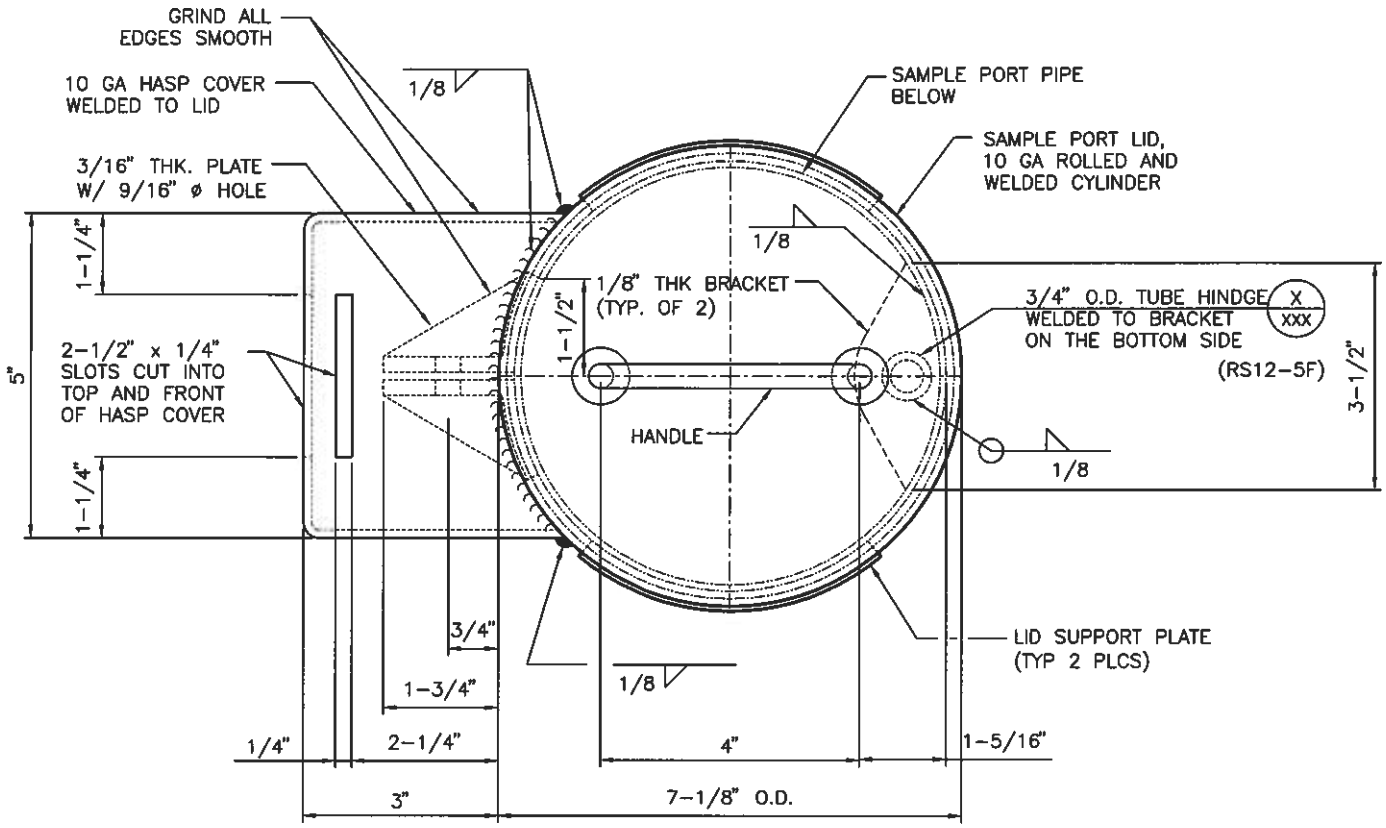

TOP VIEW

SAMPLE PORT LID

NOT TO SCALE RS12-5E 022409