TYPE	AMPS
DESIGN	1200
CONNECTED	
DEMAND	

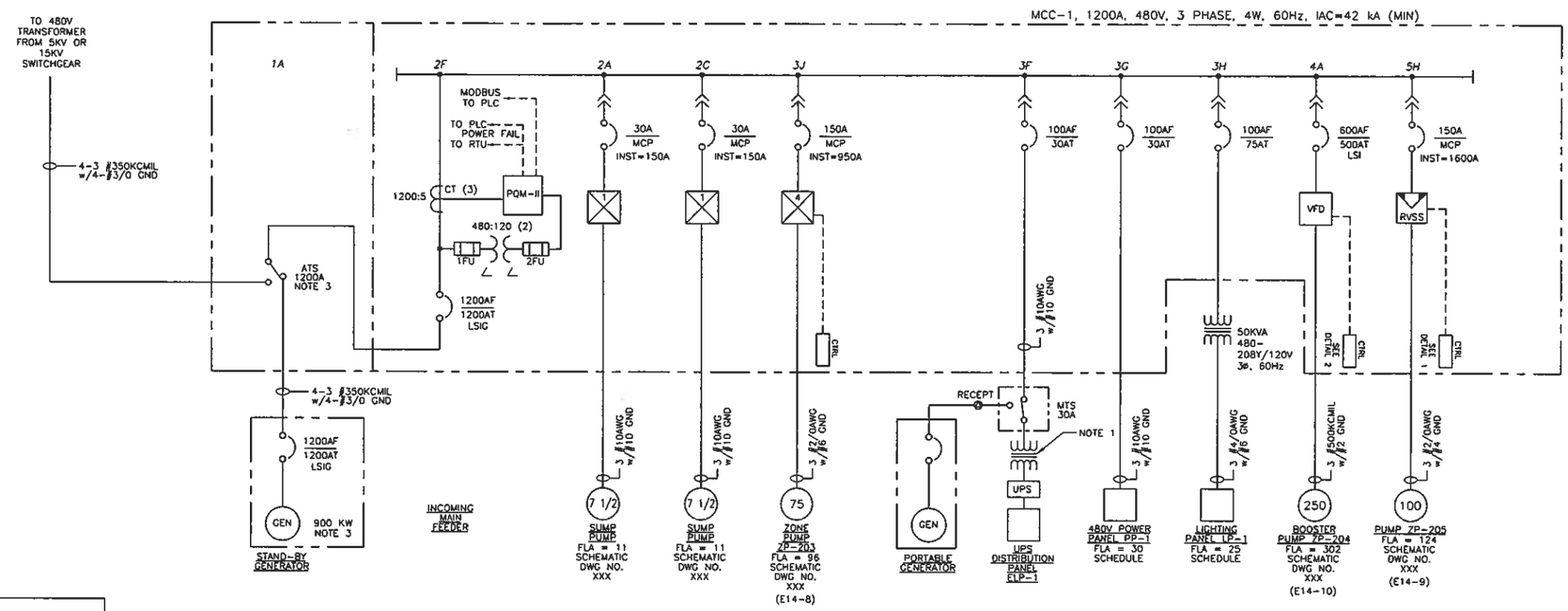

TYPICAL SINGLE LINE DIAGRAM

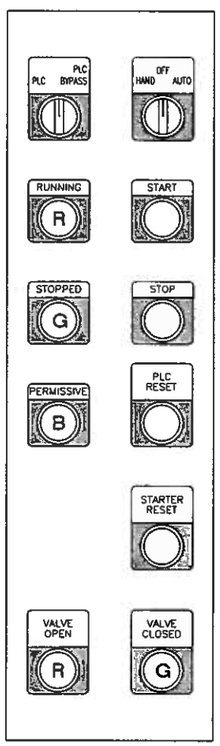

CONTROL DETAIL 1

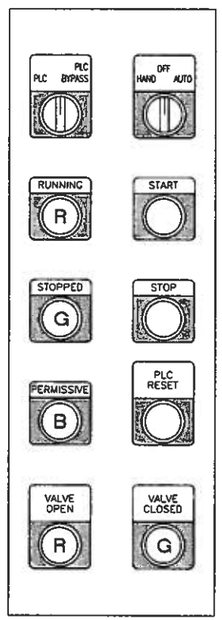

CONTROL DETAIL 2

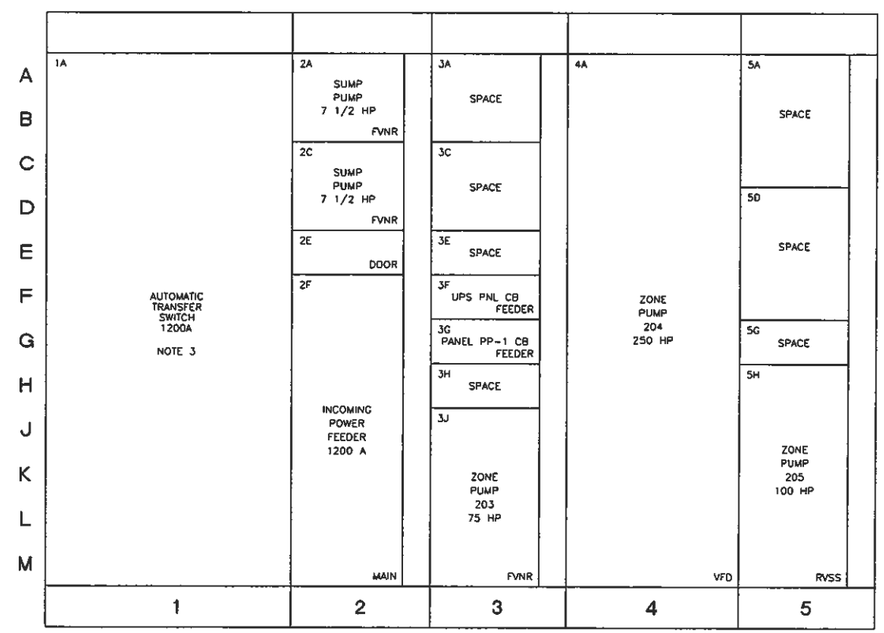

TYPICAL MCC ELEVATION

NOTES

1. NOTE TO ENGINEER: MINIMUM SIZE OF UPS TRANSFORMER IS 10KVA PER SPECIFICATIONS.
2. NOTE TO ENGINEER: SHOW FRAME SIZE ON FEEDERS AND MAINS.
3. NOTE TO ENGINEER: THE INCOMING LINE GENERATOR AND TRANSFER SWITCH SHALL BE PROVIDED ON CLOSED ZONE SYSTEMS ONLY. THE GENERATOR AND TRANSFER SWITCH RATINGS SHALL BE ADEQUATE TO OPERATE THE ENTIRE PUMP STATION FOR THE DURATION OF ANY OUTAGE.
4. ALL PUSHBUTTONS, INDICATING LIGHTS, AND OPERATOR INTERFACE MODULES SHALL BE LOCATED ON THE FRONT OF THE STARTER DOOR.

TYPICAL SINGLE LINE DIAGRAM AND ELEVATION FOR 480 VOLT SWITCHGEAR AND MOTOR CONTROL CENTER

NOT TO SCALE

E14-6 041907