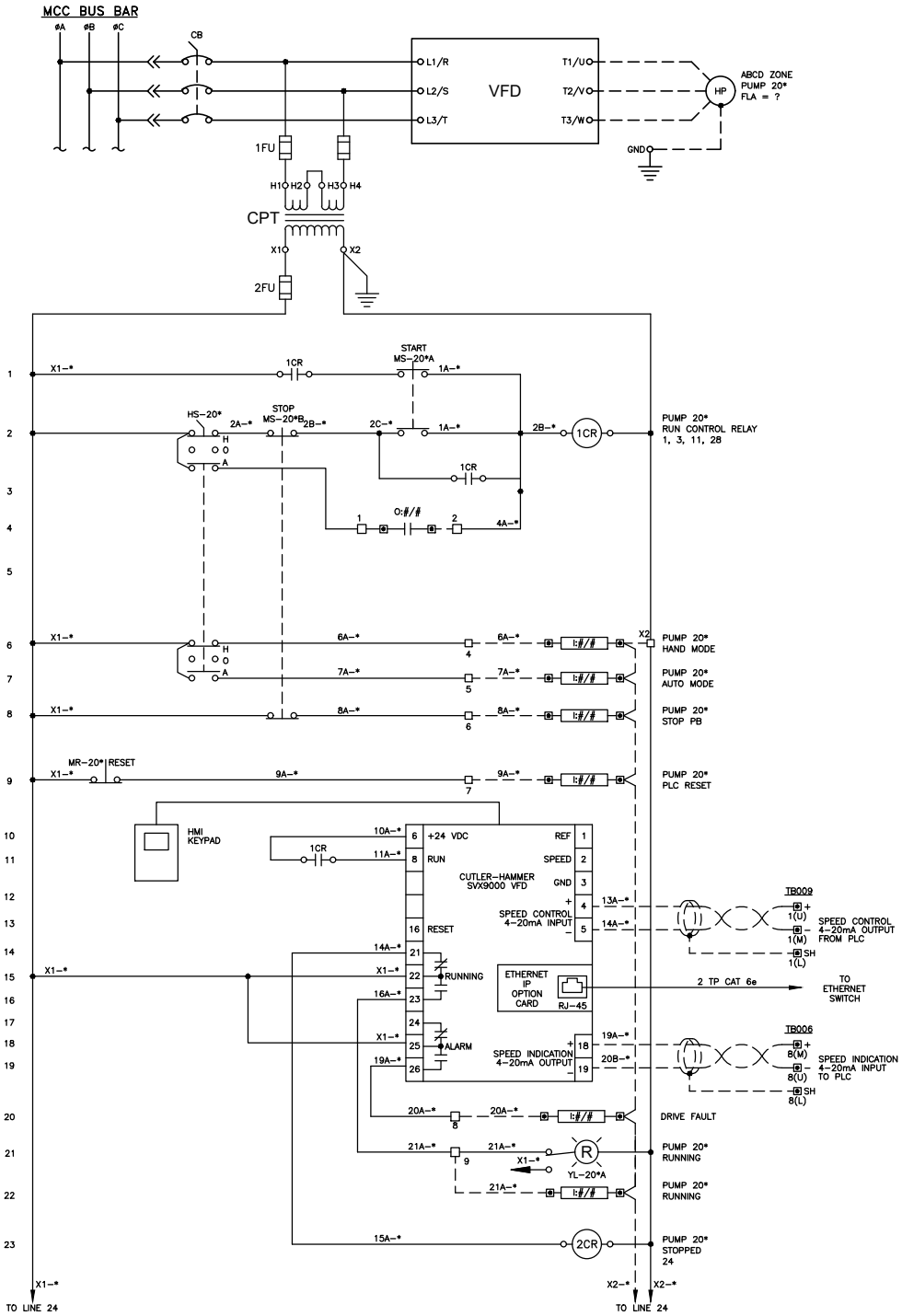

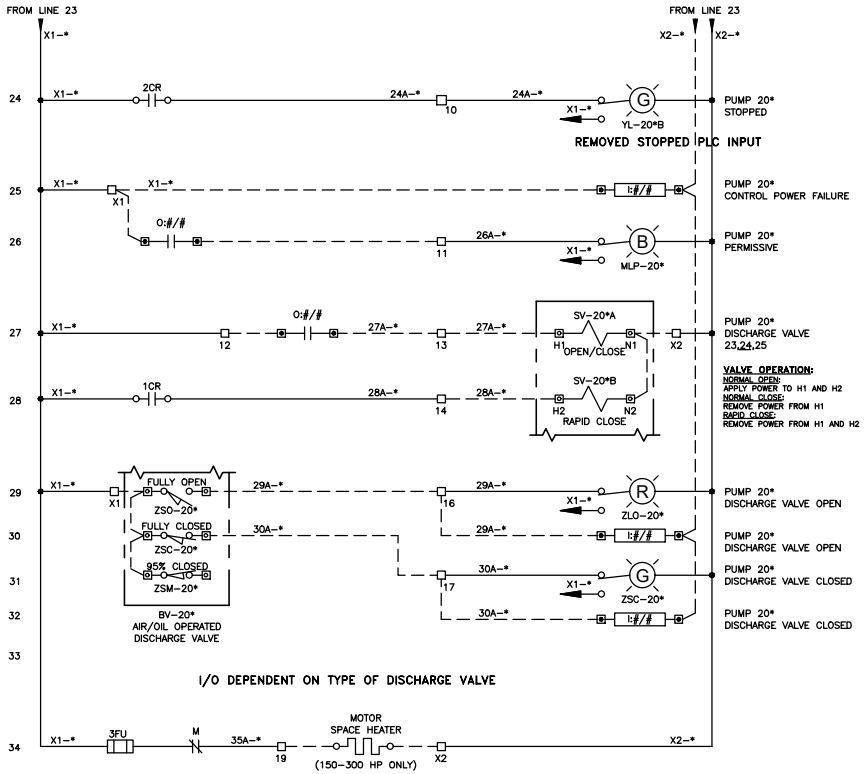

NOTES:

1. THE ASTERISK (*) REFERS TO A SEQUENTIAL NUMBER FOR THE PUMPS IN THE PUMP STATION.
2. THE 95% CLOSED LIMIT SWITCH IS OPEN WHEN THE DISCHARGE VALVE IS 95-100% CLOSED.
3. P&ID REFERENCE DRAWING XXX (IT04-14)
4. PLC REFERENCE DRAWINGS XXX, XXX, XXX AND XXX (IT06-5, IT06-7, IT06-9, IT06-14) (NOTE TO ENGINEER: THIS SCHEMATIC IS FOR ZONE PUMPS ONLY)
5. # - REFER TO PLC DRAWINGS FOR WIRE NUMBERS, TERMINAL NUMBERS, AND PRINT NUMBER.

TYPICAL VFD MOTOR CONTROLLER FOR 100 - 300 HP
AT 480 VOLTS, 3 DIA, 60HZ SCHEMATIC DIAGRAM

NOT TO SCALE E14-10 021522