APPROXIMATE PIPELINE STATIONING OF TEST STATIONS		
DWG NO	STATION	ADDITIONAL
XX	XXX+XX.XX	XXXXXXX

NOTES:

1. USE ONLY NATIVE SOIL FREE OF ROCKS AND CLODS FOR BACKFILL AROUND CELLS WITH A MINIMUM OF 5 GALS OF WATER SATURATION DURING INSTALLATION. DO NOT USE SAND AS BACKFILL.

2. SUPPLY ENOUGH WIRE FROM EACH LEAD TO REACH FULL EASEMENT WIDTH PLUS FIVE (5) ADDITIONAL FEET. COIL WIRE IN BOTTOM OF BOX. (20' MAX.)
   BLACK WIRE - CASING
   WHITE WIRE - DIP PIPELINE

3. TEST STATION PLACEMENT TO BE PERPENDICULAR TO PIPE, AT INTERSECTIONS, TEST STATION WIRES TO BE PLACED PARALLEL TO PIPE FOR PLACEMENT PERPENDICULAR TO PIPE AFTER ROAD EASEMENT RADIUS. PLACE IN SIDEWALK OR TO BE COLLARED.

4. STANDARD CASING PER UDACS PLATE 23 WITH ANNULAR SPACE FILLED WITH CLASS I CLSM PIPE TO BE TYPE 53 DIP RESTRAINED FULL LENGTH, AND DOUBLE WRAPPED.

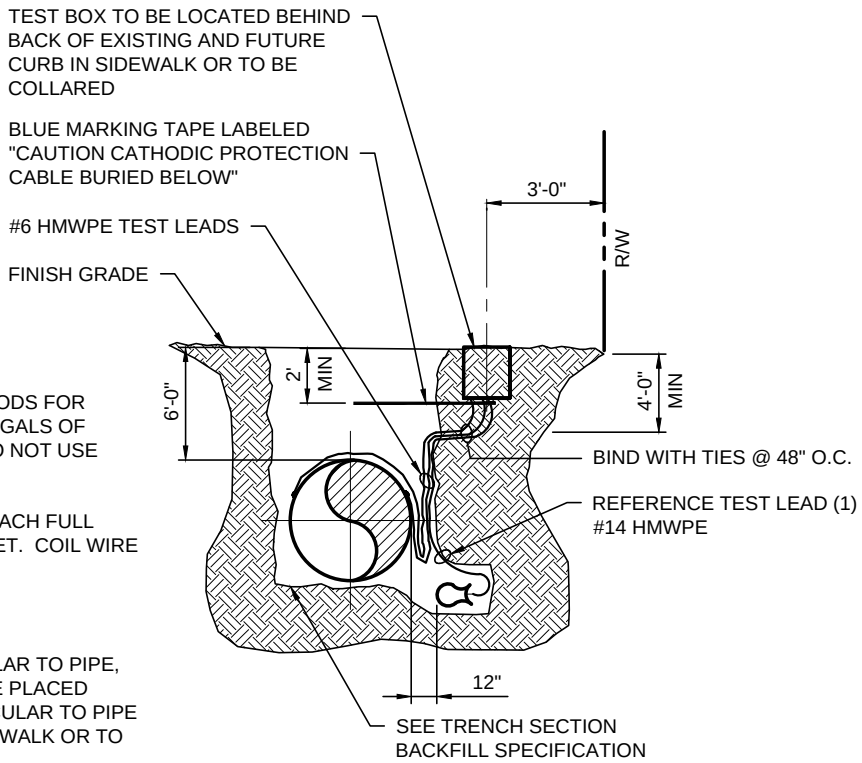

SECTION A

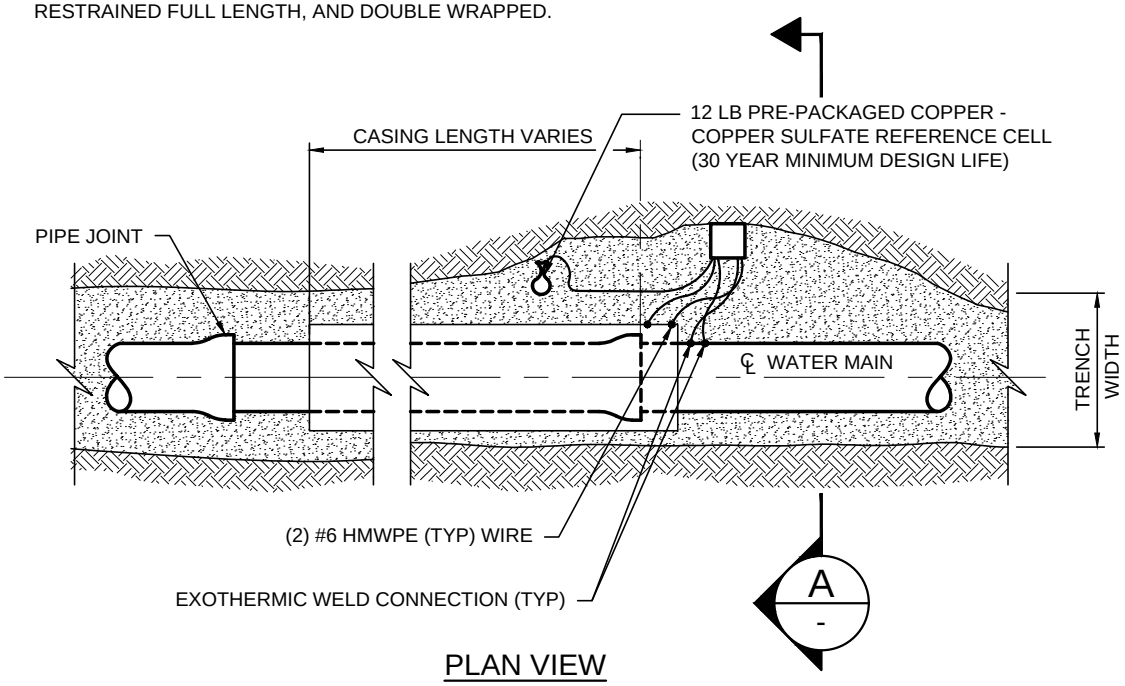

PLAN VIEW

TYPE "C" TEST STATION WITHOUT ANODES

NOT TO SCALE PL12-1b 082420