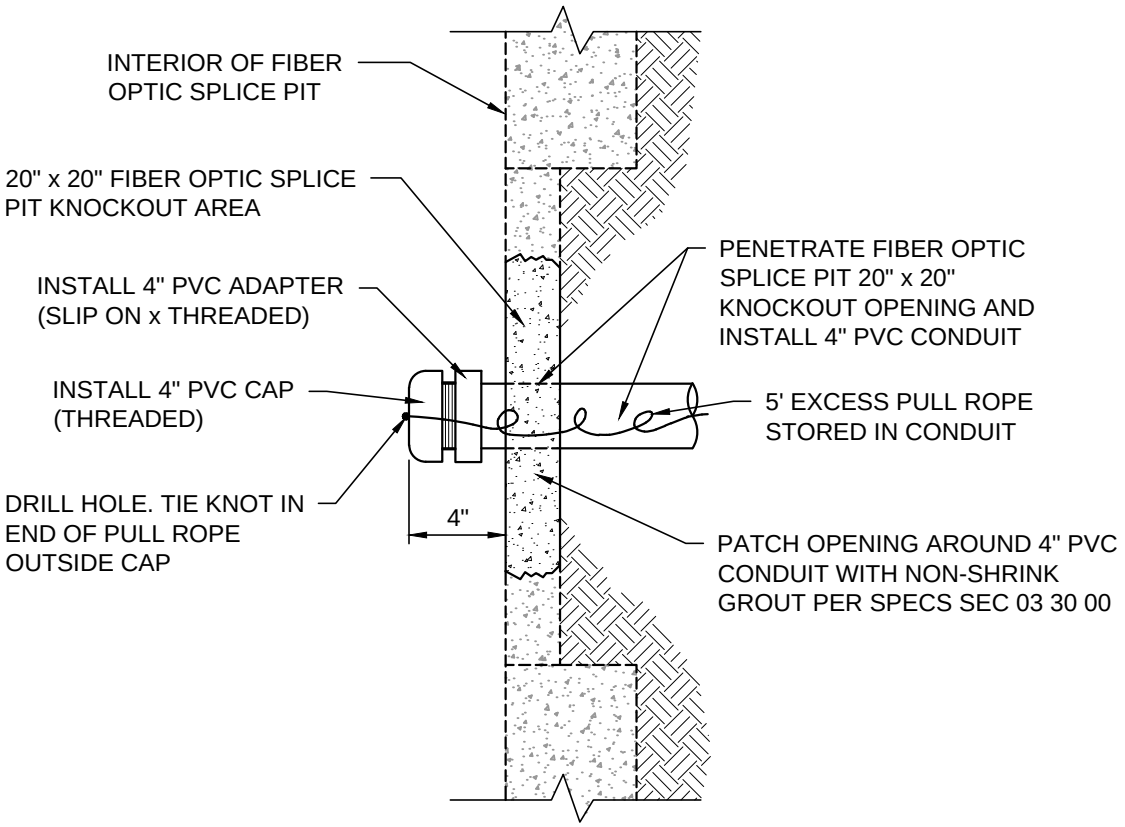

FIBER OPTIC SPLICE PIT PENETRATION DETAIL

NOT TO SCALE

PL08-6 072315