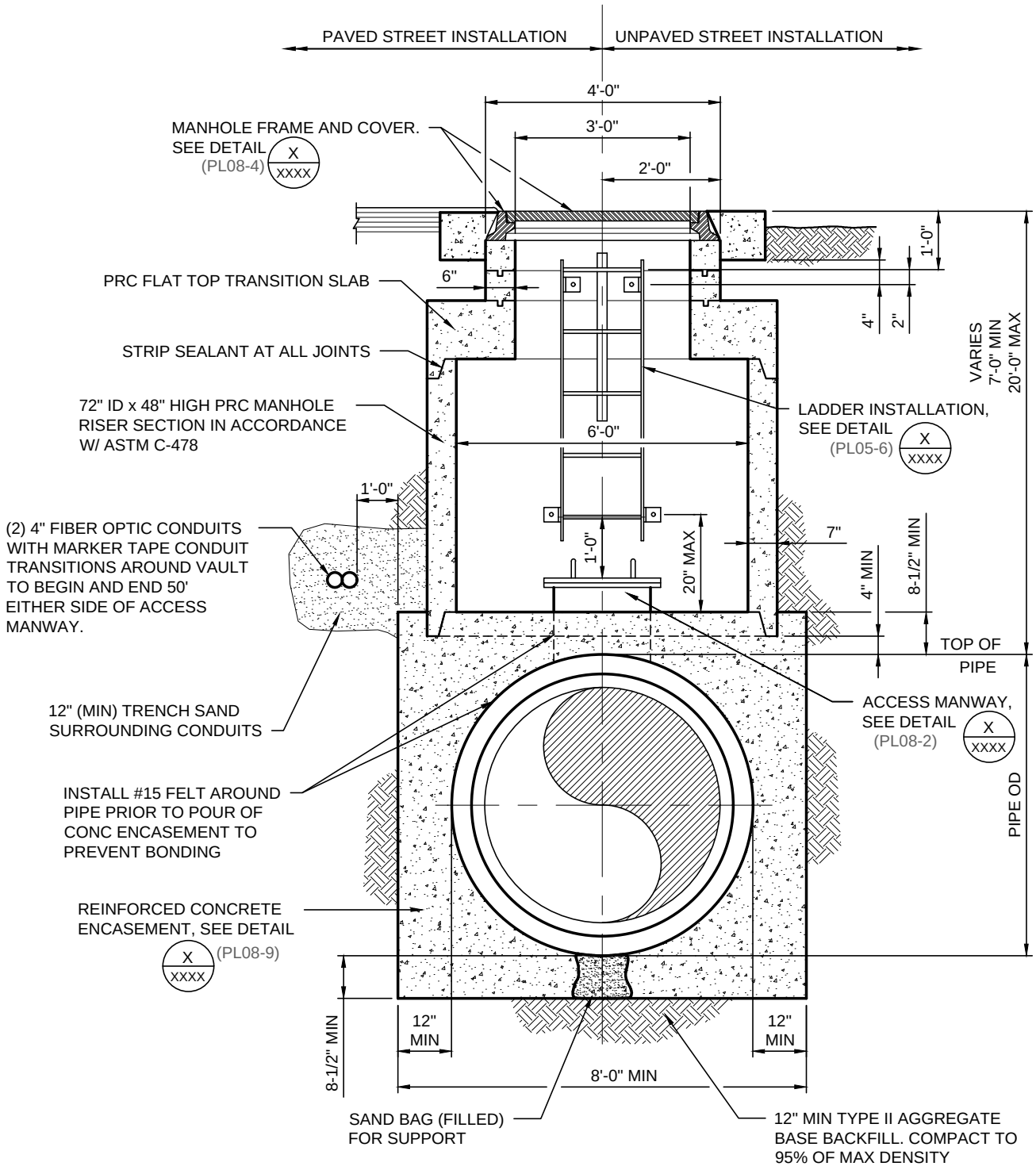

ACCESS MANWAY SECTION - II - FLAT TOP

NOT TO SCALE

PL08-D 090419