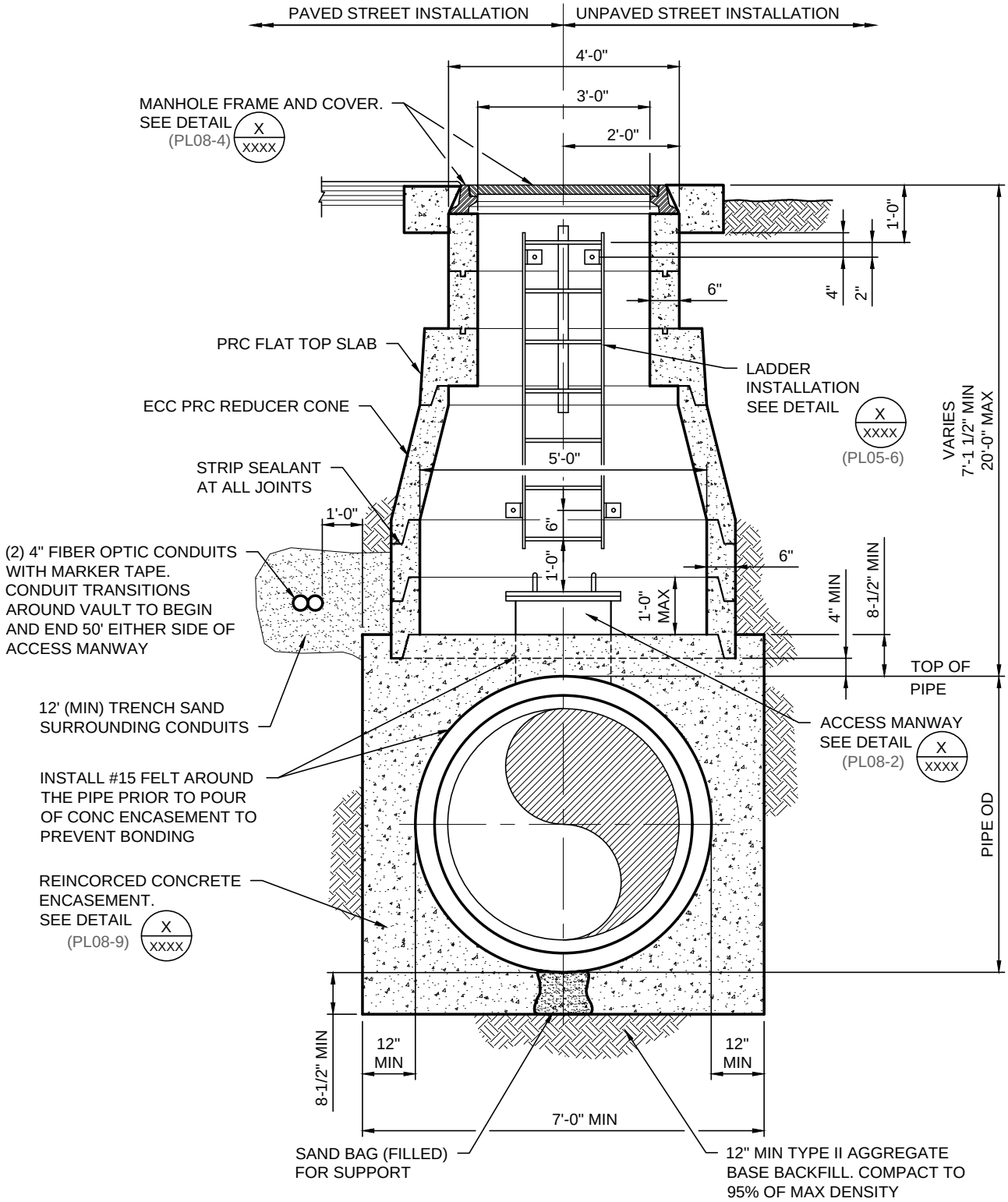

ACCESS MANWAY SECTION - II - CONICAL

NOT TO SCALE

PL08-B 090419